VCD U1 T05a

Drawing in ISOMETRIC | SHEET A | Camera

Draw the camera below in Isometric
Draw it first LIGHTLY in an H pencil.
Use a 30/60 set square and a drawing board.
Draw the overall solid shape first and then construct the details.
An ellipse template will help you complete the circles
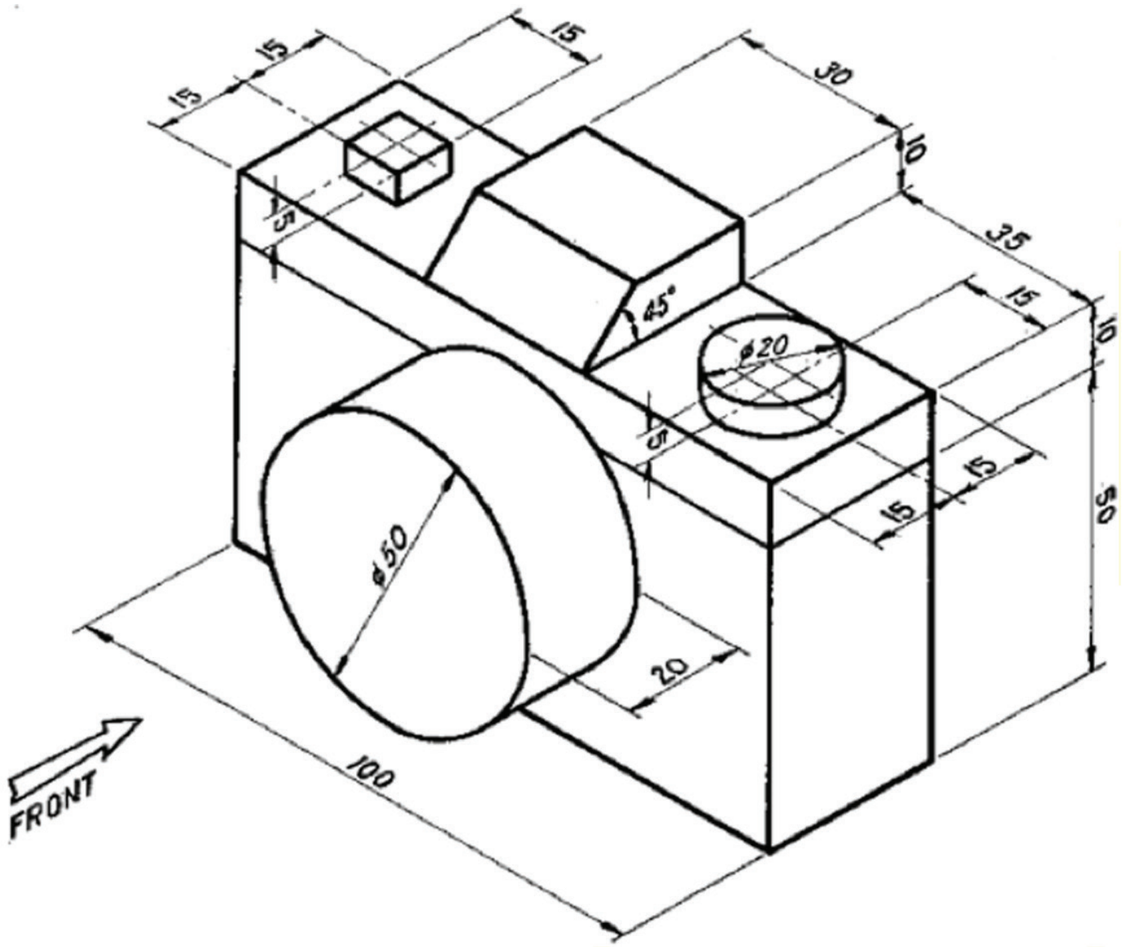
Complete the drawing by going over it in a 0.3 Fineliner
(DO NOT draw the measurements)